Railway Communications Solutions

RAD
data communications

Stay on Track. Communicate.

Efficient railway operations rely on accurate, on-time communications among stations, control and dispatch centers, and rolling stock, to ensure safety, security and uninterrupted service. Railway communication systems (RCS) must therefore provide reliable transmission of signaling, voice, video, and data traffic along railway lines and across backbone transmission networks. What's more, passenger expectations for mobile and broadband coverage everywhere – both in-station and on-board – add yet more connectivity services that must be supported by main lines, regional commuters and urban transit systems.

For almost 30 years, RAD Data Communications has been working closely with system integrators and railway operators around the world to address the particular communications needs of the rail transportation industry. Our comprehensive **AXCESS+** portfolio of multiservice multiplexers, aggregators and trackside range extenders connect any type of equipment – from SCADA RTUs, GSM-R base stations and CCTV cameras, to variable message signs (VMS) and WiFi hotspot routers – over any media and network protocol. Fully equipped with remote monitoring and control capabilities, RAD's wide range of field-proven product solutions are specifically designed to ensure that railway network operations remain safely on track.

AXCESS+

Rolling Forward with RAD

RAD is the preferred communications vendor for many railway companies, mass transit authorities and system integrators around the world. Here are the reasons why:

Technological Excellence

RAD's standards-compliant equipment offers rugged, long-lasting and dependable solutions with low TCO that facilitate multiservice support for any network environment, as well as minimal delay for accurate, real-time transmissions and High Availability design.

Long-Term Product Support

RAD's clear product roadmaps and evolutionary approach to life-cycle management ensure continued support for legacy services and seamless introduction of NGN technologies. Our rail industry customers have the freedom to extend their planning horizons with respect to railway communications, without forced investments in network upgrades due to product end-of-life decisions made unilaterally by vendors.

Sustainable Solutions

At RAD, we share our customers' commitment to the environment and understand their need to meet increasingly rigorous environmental regulation. RAD has been successfully implementing groundbreaking innovation in form-factor miniaturization and power consumption optimization to limit material waste and carbon emissions.

Customer Commitment

We apply extensive care and effort to our Global Professional Services program – from RADcare support packages and international training courses to project management and on-site services – to ensure that our customers are completely satisfied with their decision to rely on RAD.

Selected Customers

System Integrators

Alstom Transport, Siemens, Bombardier, Strukton, BAM, Asset Rail, DataMetrix

Partners

250 certified RAD partners in more than 150 countries

Solution Versatility

Interfaces

- X.21/V.35
- RS-232/V.24
- E1/T1
- N x 64 kbps
- Sub-64 kbps
- Ethernet
- ISDN
- Synchronous/ Asynchronous

Service Connectivity

- SCADA
- Analog Voice FXO/FXS/E&M
- Teleconference/Hotline
- Video & CCTV
- Alarms & Signals
- Ticketing & POS
- GSM-R/TETRA
- LAN
- PABX
- WiFi Hot Spots
- Passenger Information Systems
- VoIP

Products

Multiservice Multiplexers and Access Nodes, MSAP

Fiber/SHDSL Multiplexers and Modems

Ethernet Range Extenders

SDH/SONET Multiplexers and ADMs

Subrate Multiplexers

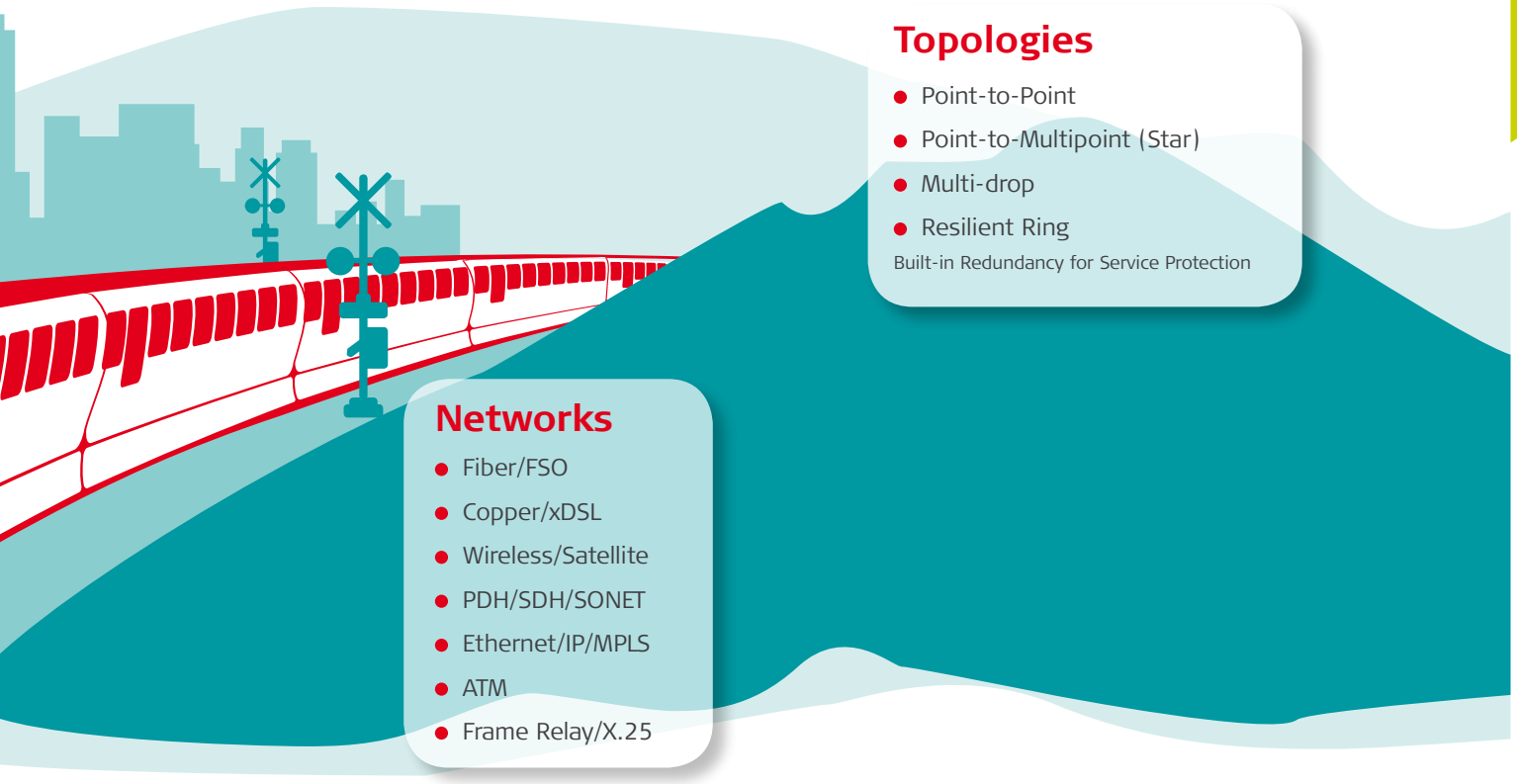

Topologies

- Point-to-Point
- Point-to-Multipoint (Star)
- Multi-drop
- Resilient Ring

Built-in Redundancy for Service Protection

Networks

- Fiber/FSO
- Copper/xDSL
- Wireless/Satellite
- PDH/SDH/SONET
- Ethernet/IP/MPLS
- ATM
- Frame Relay/X.25

Digital Cross Connects

TDM NTUs

Wireless Multiplexers

Ethernet Converters, Aggregators and Access Devices

TDM over IP Multiplexers

Applications

Multiservice Rail Station Connectivity

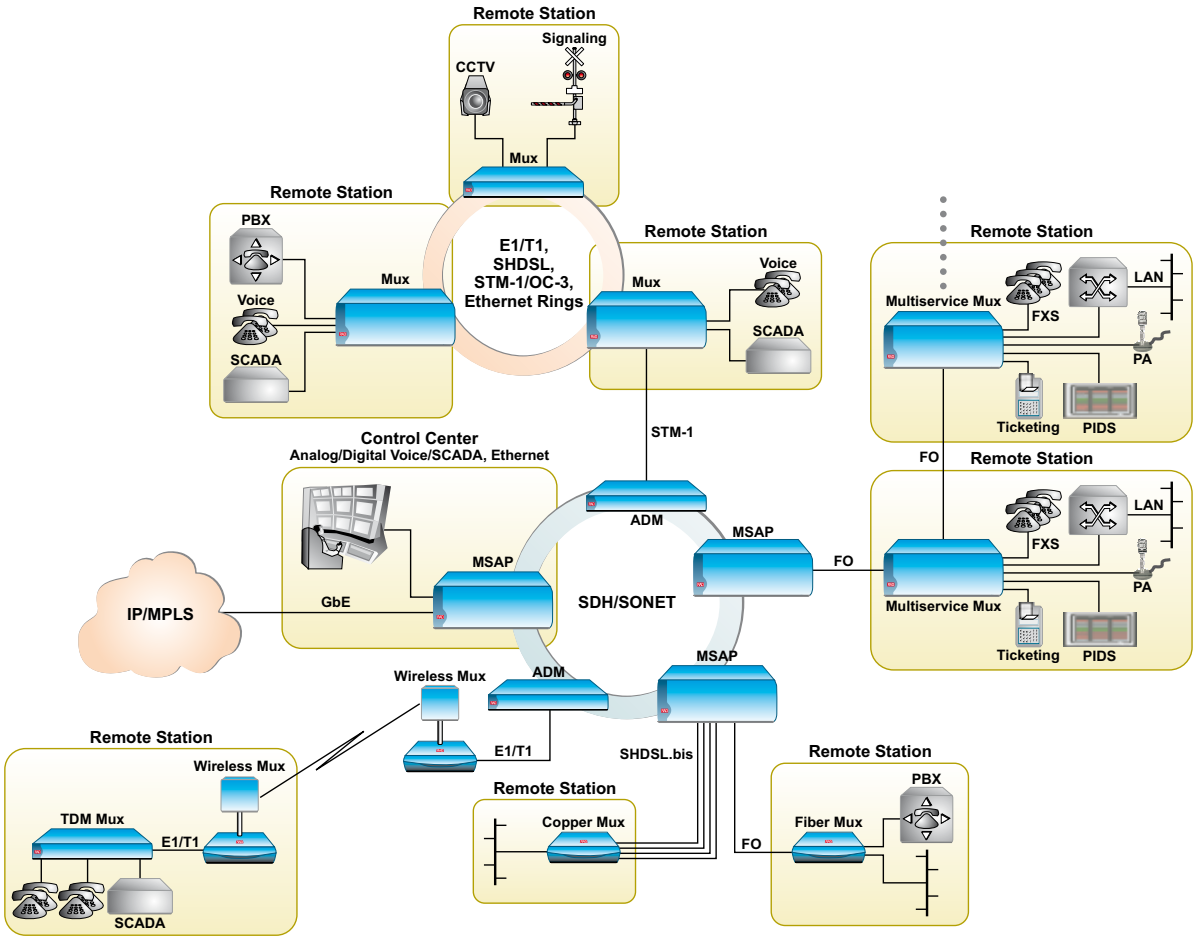

Single box solutions for multiservice rail station connectivity over copper, fiber and wireless

- Support all communications needs, including in-station services, CBTC (communications-based train control) and ATC (automatic train control) systems, and inter-station connectivity with link and system redundancy to ensure service continuity
- Reliable, accurate and immediate delivery of mission-critical data, alarms and signals between railway control rooms, trains and remote stations throughout the rail network
- Optimal use of available copper with multi-drop connectivity over SHDSL across long distances with unified management from the control center

- Carrier-class management system for centralized control of network elements and easy integration with railway OSS: Remote configuration, diagnostics and reporting; FCAPS functionality; Northbound APIs; High Availability/ Disaster Recovery support
- Small footprint saves rack space and power consumption, as well as cabling and cooling resources

Migrating to IP Communications

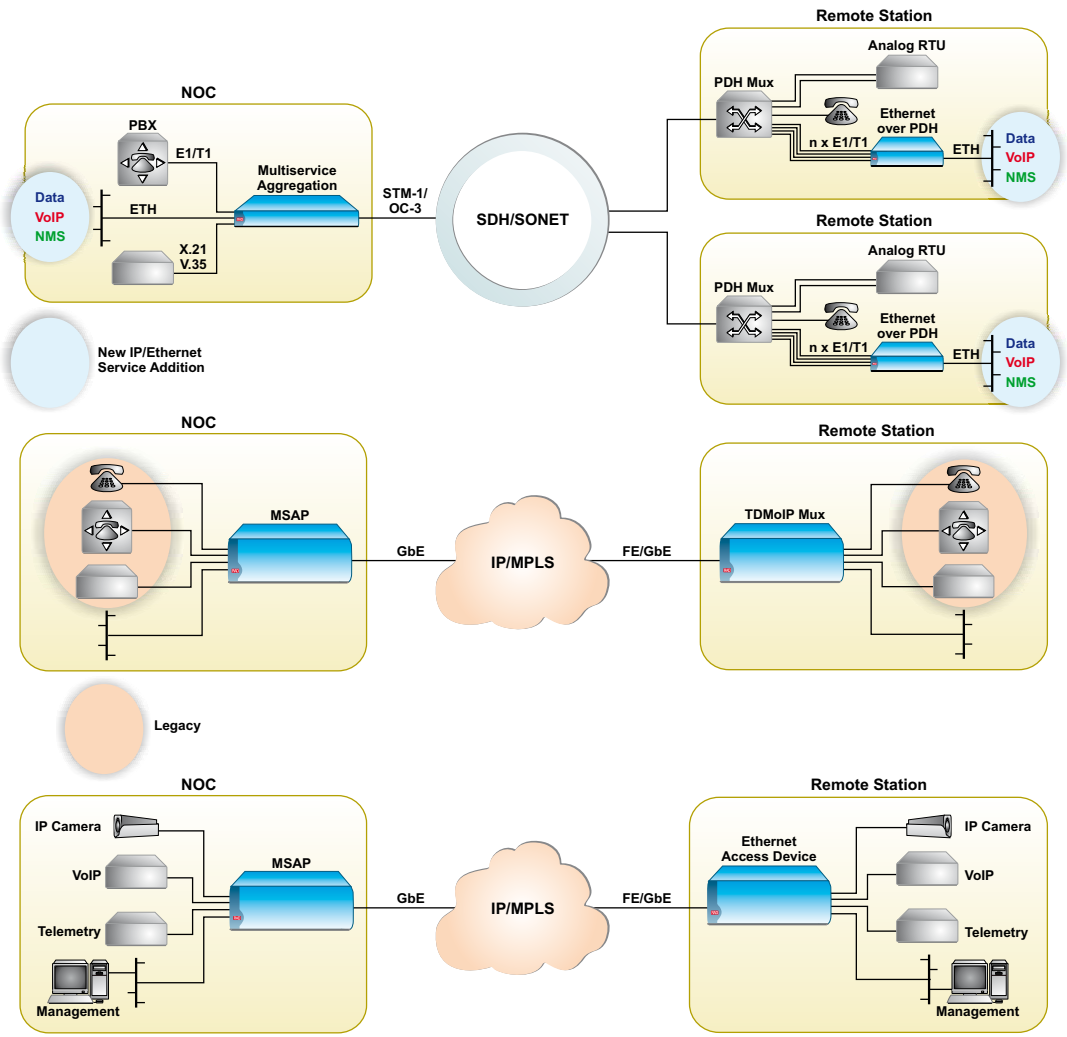

Connecting new IP/Ethernet-based equipment over existing SDH/SONET infrastructure or PSN and delivering legacy/TDM services over an IP network

- Easy integration of Ethernet/IP-based services and equipment, including IP-based RTUs, Internet VPN, VoIP telephony, and broadband IP cameras
- Service continuity for legacy TDM applications and equipment, even after SDH/SONET networks are replaced
- Enable CapEx savings, fast deployment and minimal interruptions to railway operations by eliminating the need for forklift upgrades
- Advanced clock recovery functionality to overcome packet delay, delay variation and packet loss inaccuracies; support differentiated quality of service (QoS) over packet transport using multi-priority traffic management, end-to-end OAM and performance monitoring
- Circuit emulation (pseudowire) solutions feature TDMoIP technology, an industry standard developed and patented by RAD, without compromising service quality or latency levels
- RADview-EMS management system enables network operators to control network elements and functions remotely

Applications

Service Extension over DSL/Fiber

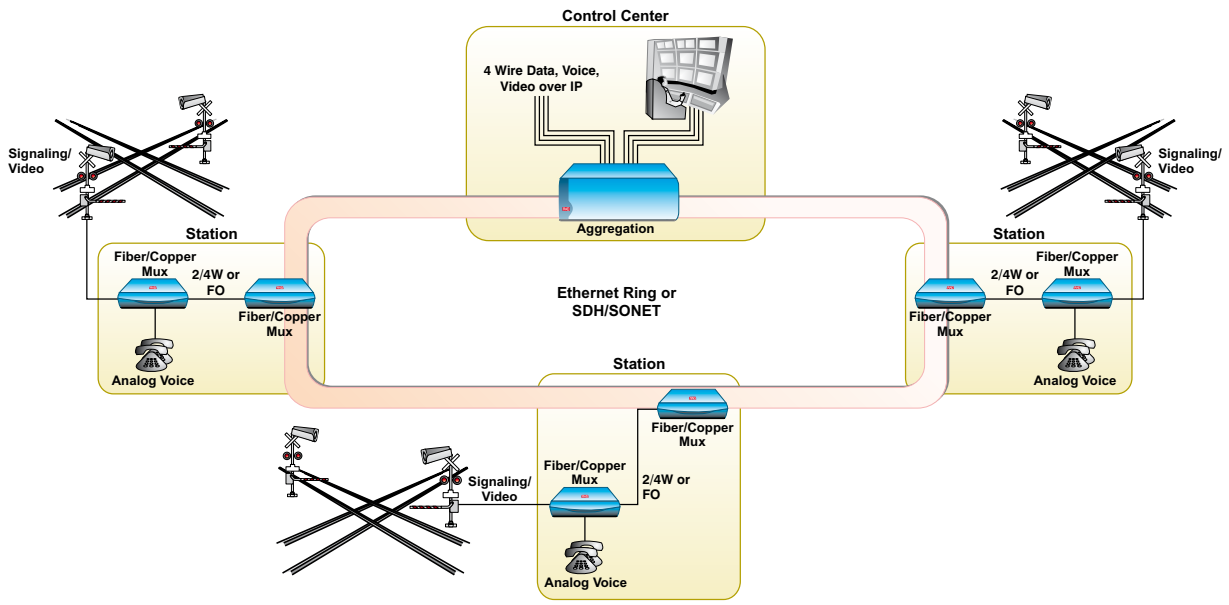

Connecting remote services to railway backbones with Ethernet/TDM extenders

- Connect remote devices and services, such as analog phones, video surveillance cameras, circuit breakers, and trackside signaling equipment to the fiber backbone over 2/4-wire SHDSL or over fiber optic connections
- Ensure reliable communications across long distances (10 km/6.2 miles over SHDSL or 120 km/74.5 miles over fiber) with data transmission rates of up to 22 Mbps (SHDSL) or 100 Mbps (FO)
- Minimize CapEx by utilizing existing infrastructure and communications lines for connecting geographically dispersed locations to the main railway network
- Suitable for trackside deployments with DIN Rail mount (EN 50022), ruggedized enclosures withstanding an extended temperature range of -20°–70°C (-4°–158°F), and EMC protection meeting EN 50121-4 standard requirements

Protected Multi-Station Connectivity

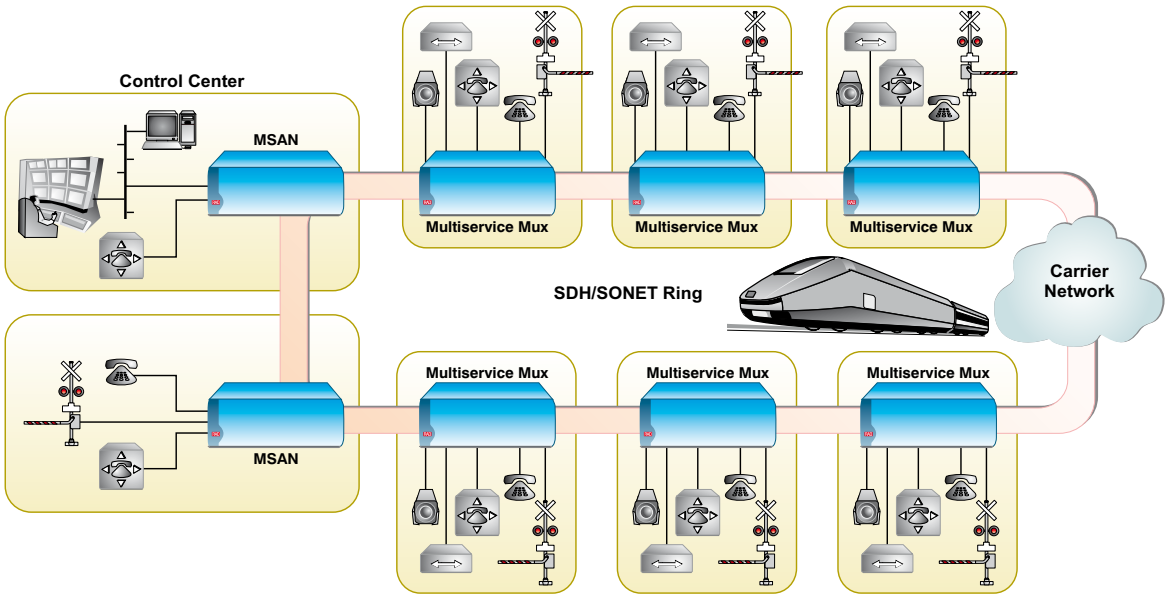

High capacity ring protection using carrier network connectivity

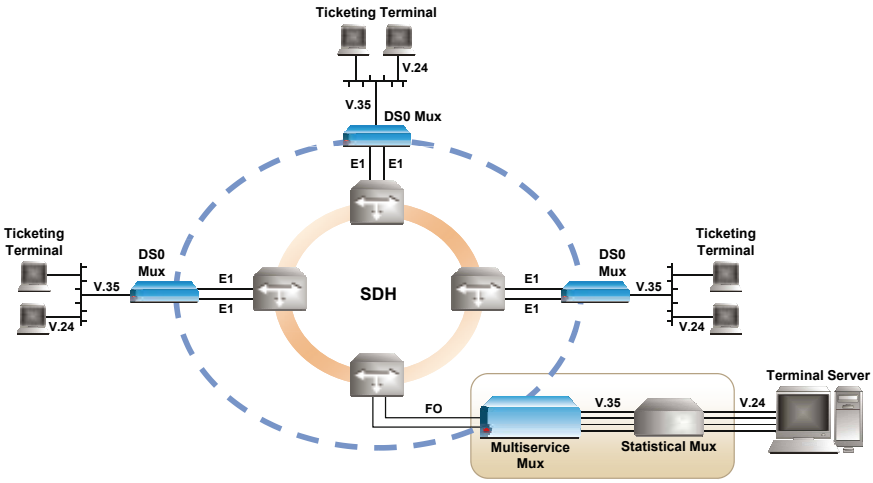

Remote station connectivity with E1/T1 ring over private SDH/SONET

- Ensure protected connectivity for mission-critical applications, including automatic train supervision (ATS), centralized traffic control (CTC), SCADA, multi-party hotlines, and passenger information systems (PIS) between stations and control room using multi-drop and ring topologies
- Self-healing, multi-rate TDM and Ethernet ring (RFER – resilient Fast Ethernet ring) support with rapid sub-50 ms restoration provide NSPF (no single point of failure) resiliency and a cost-effective alternative to multi-link connectivity
- Improved granularity with n x 64 kbps and E1 ring capabilities optimize bandwidth utilization over dark fiber, SDH and copper
- 1+1 and 1:1 protection through E1/T1 trunk switching and pseudowire redundancy support multiple alternative routing schemes in event of trunk failure

Applications

Video Surveillance Backhaul

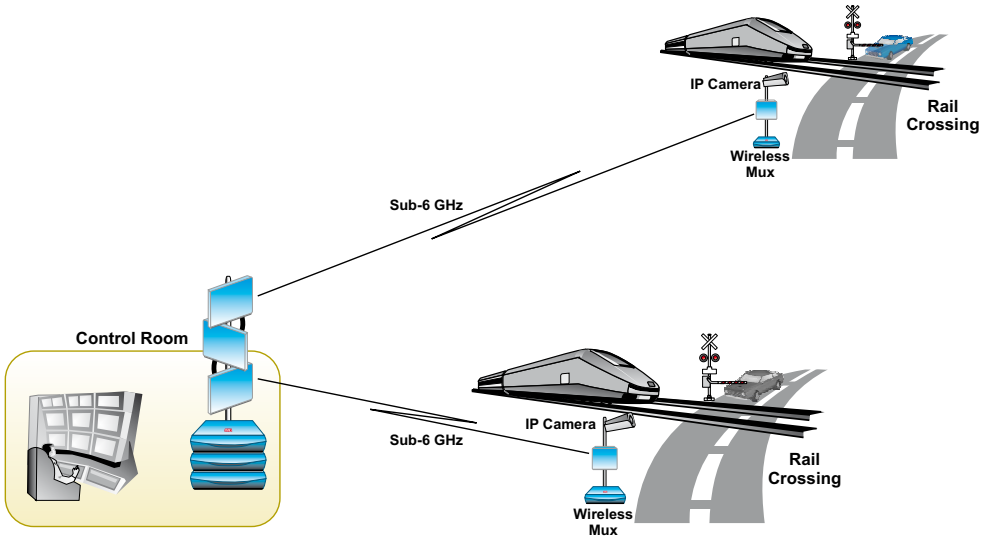

Remote monitoring of level crossing over wireless backhaul

- Transmit highly focused video from unmanned facilities and remote locations over wireless backhaul using point-to-point and point-to-multipoint sub-6 GHz wireless mux solutions
- Increase safety with timely alerts to operators and train drivers about hazardous conditions along the line and at level crossings; enable asset security against crime and vandalism
- Save on CapEx and OpEx by optimizing use of available bandwidth with asymmetrical upload/download throughput
- Enable simultaneous transmission from multiple locations, while ensuring high availability and service reliability with MHS (monitored hot standby) and HSS (hub site synchronization)

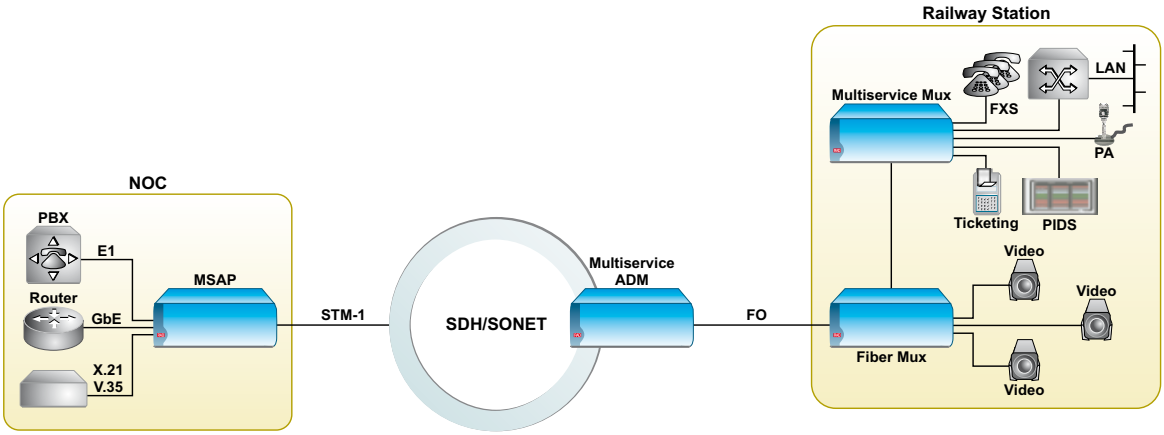

High-capacity video traffic connectivity over fiber

- Enable 24x7 remote monitoring and deliver actionable information in real time to allow security and operations personnel at remote control centers to take immediate action when required
- Provide high capacity to accommodate high resolution IP video throughput from multiple cameras, as well as advanced analytics and command signals for fixed and pan-tilt-zoom (PTZ) cameras
- Support secure VPN applications for IP camera traffic between remote stations and NOC

GSM-R and TETRA Connectivity

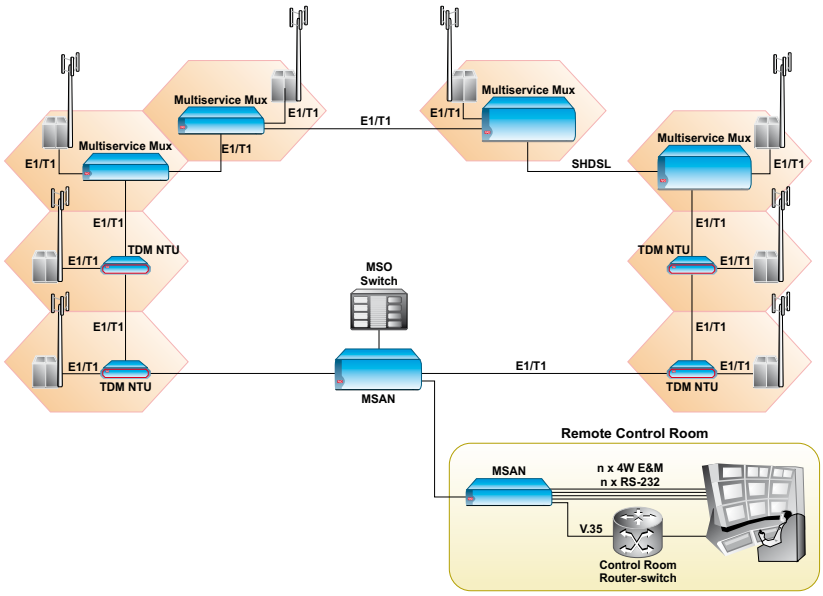

TETRA/GSM-R backhaul over High Availability TDM rings

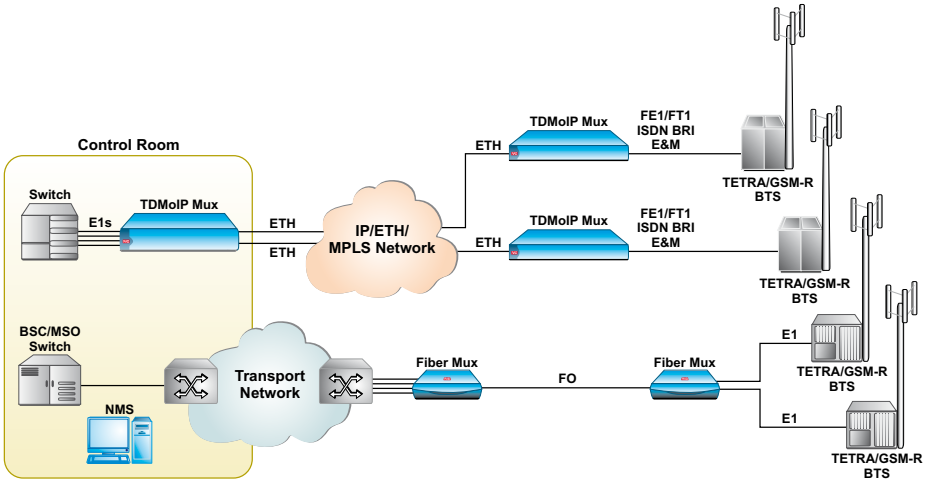

TETRA/GSM-R radio traffic over point-to-point fiber or third-party packet networks

- Extensive experience with TETRA radio equipment from major vendors to provide standards-based interoperability and High Availability in professional mobile radio (PMR) networks over wireline and wireless infrastructure
- Long-distance extension of critical GSM-R traffic, including Long Line Public Address (LLPA) announcements, control and protection (ETCS and ERTMS), on-board communications, messages, alarms and voice, from remote dispatch terminals to hubs, as well as between drivers, train stations, classification yards, and rail tracks
- Comprehensive support for resilient PDH, SDH and Ethernet ring topologies to ensure fail-safe communications of voice, low speed data and high speed TEDS (TETRA enhanced data services) traffic
- Scalable systems with a future-proof migration path, connecting TDM base stations and switches over new networks and eliminating the need for deploying new equipment as the network is upgraded from TDM to IP

International Headquarters
RAD Data Communications Ltd.
24 Raoul Wallenberg Street
Tel Aviv 69719, Israel
Tel: 972-3-6458181
Fax: 972-3-7604732
email: market@rad.com
www.rad.com

North America Headquarters
RAD Data Communications, Inc.
900 Corporate Drive
Mahwah, NJ 07430, USA
Tel: 1-201-529-1100
Toll free: 1-800-444-7234
Fax: 1-201-529-5777
email: market@radusa.com
www.radusa.com

Regional Offices

Far East
RAD Far East Ltd.
Suite A, 26/F, One Capital Place
18 Luard Rd., Wanchai
Hong Kong, China
Tel: 852-25270101
Fax: 852-25284761
email: market@radfe.com.hk

Latin America
RAD América Latina S.A.
Gorostiaga 1664 1° A Floor
1426 Buenos Aires, Argentina
Tel: 54-11-4779-1117
Fax: 54-11-4771-0460
email: info@radal.com.ar
www.rad-espanol.com

Oceania
RAD Data Australia Pty Ltd.
Level 7, Suite 2, 100 Walker Street
North Sydney NSW 2060, Australia
Tel: 61-2-9922 7581
Fax: 61-2-9954 0577
email: info@raddata.com.au
www.raddata.com.au

Local Offices

Brazil
RAD do Brasil Ltda.
Edifício Diamond Tower
Rua Maestro Cardim, 1.191, Floor 13
Cj. 135 CEP 01323-001, São Paulo, SP
Brazil
Tel: 55-11-3171-2940
Fax: 55-11-3253-7754
email: rad_brasil@radbr.com.br
www.radbr.com.br

China
RAD China
Suite 801, Global Trade Center
36 Beisanhuan Donglu
Dongcheng District
Beijing 100013, China
Tel: 86-10-5825 7665
Fax: 86-10-5825 7795
email: info@raddata.com.cn
www.raddata.com.cn

France
RAD France
Vecteur Sud - Bat A
1er étage
70-86, Avenue de la République
92320 Chatillon, France
Tel: 33-1-41 17 41 80
Fax: 33-1-41 17 41 81
email: rad.info@rad-france.fr
www.rad-france.fr

Germany
RAD Data Communications GmbH
Otto-Hahn-Str. 28-30
85521 Ottobrunn-Riemerling
Germany
Tel: 49-89-665927-0
Fax: 49-89-665927-77
email: info@rad-data.de
www.rad-data.de

India
RAD Data Communications Pvt. Ltd.
407, Madhava, Plot No. C-4, E-Block
Bandra-Kurla Complex
Bandra (East) Mumbai 400 051
India
Tel: 91-22-65-200200
Fax: 91-22-30-683687
email: radindia@rad.com
www.radindia.in

Japan
RAD Japan K.K.
Bureau Toranomon 10F
2-7-16 Toranomon, Minato-ku
Tokyo, Japan
Tel: 81-3-5251 3651
Fax: 81-3-5251 3652
email: japan-rad@raddata.co.jp
www.raddata.co.jp

Russia
RAD Data Communications Ltd.
10, B. Tulskaya St., Building 9
Floor 7, Office 9705
Moscow, 115191, Russia
Tel: 7-495-231-1239
Fax: 7-495-231-1097
email: info_russia@rad.ru
www.rad.ru

United Kingdom
RAD Data Communications Ltd. (UK)
PO Box 318
Romsey, S051 1AS
England
Tel: 44-1794-514220
email: info@raddata.co.uk
www.raddata.co.uk

RAD
data communications
The Access Company

Catalog number 802451, Version 9/10

www.rad.com